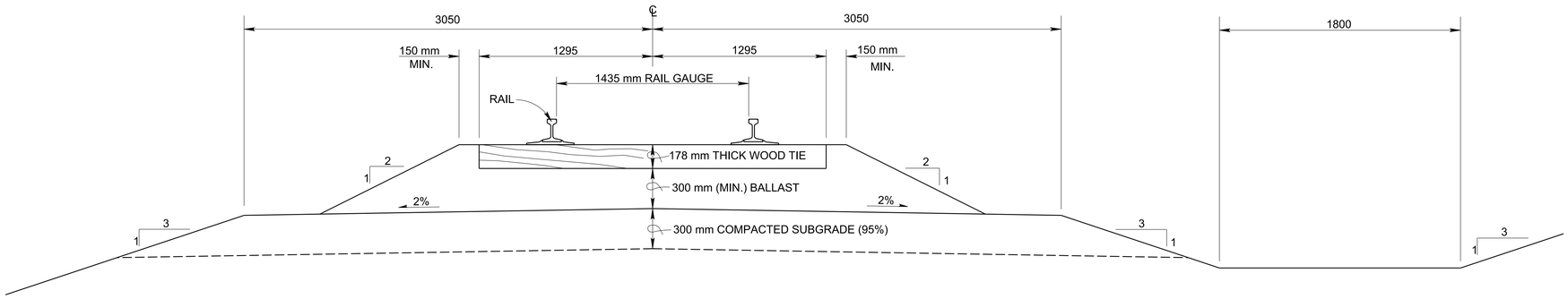

TYPICAL RAILROAD TRACK SECTION W/O SUBBALLAST

NO SCALE

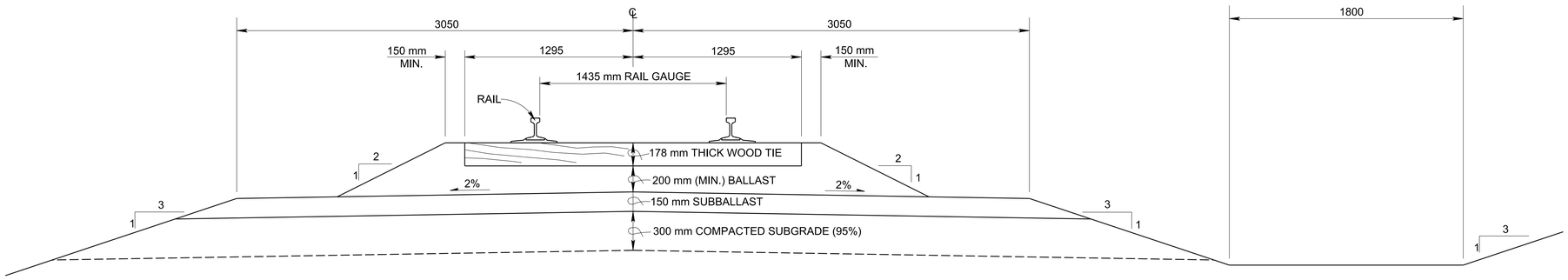

TYPICAL RAILROAD TRACK SECTION W/SUBBALLAST

NO SCALE

ALL DIMENSIONS SHOWN IN MILLIMETRES UNLESS OTHERWISE NOTED

US Army Corps of Engineers
Omaha District

Symbol	Description	Date	Approved

Designed by: X X	Date: DECEMBER 1997	Rev.	Spec. No. DACA 45
Dwn by: X	Ckd by: X	Design file no. C201.DGN	Contract No. DACA 45
Reviewed by: X		Plot Scale Ratio: 20 : 1	
Submitted by: X Chief: X		Drawing code: X	

X X X

TYPICAL RAILROAD TRACK SECTIONS

Sheet reference number:

C2.01