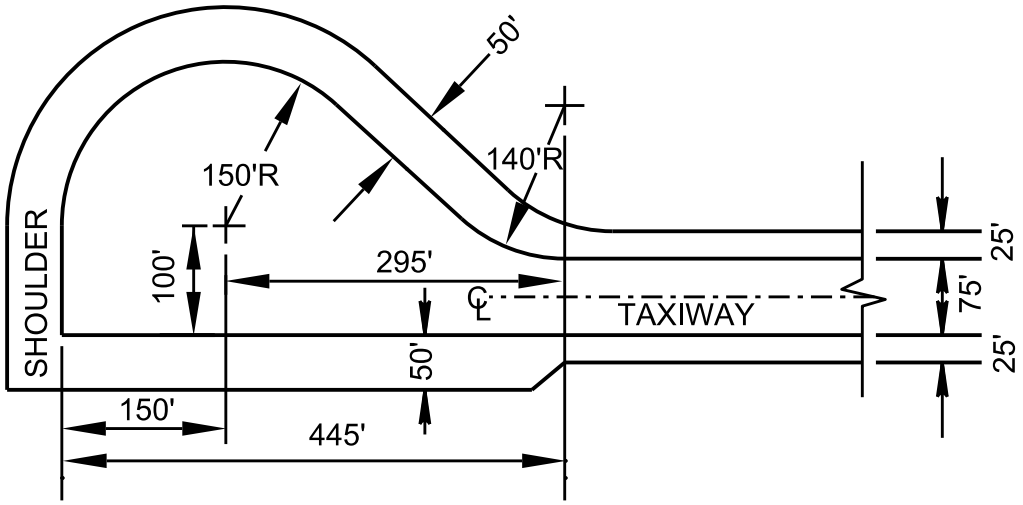

FOR C-5 AND C-141

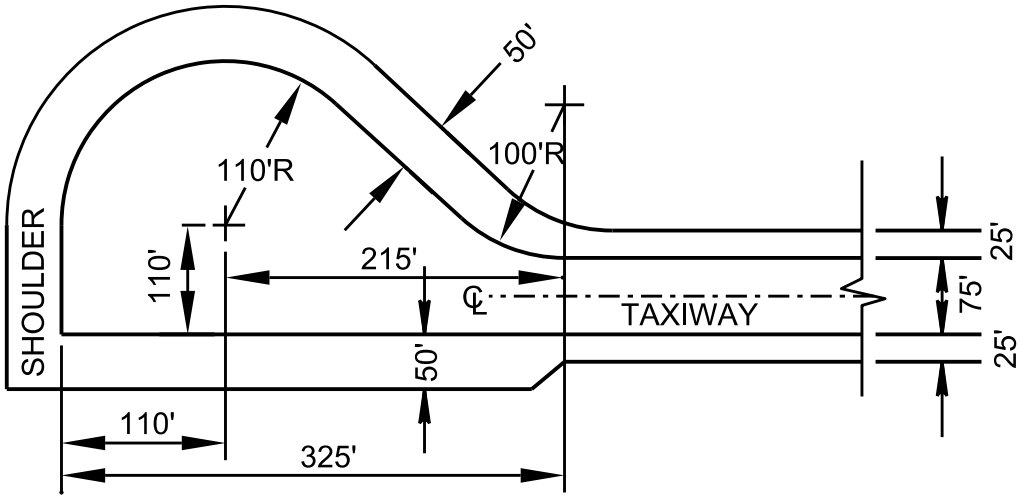

FOR C-130

REFERENCE: AFM 86-2, STANDARD FACILITY REQUIREMENTS

DANGEROUS CARGO APRON	DATE AUG 1992	FIGURE 2-19c