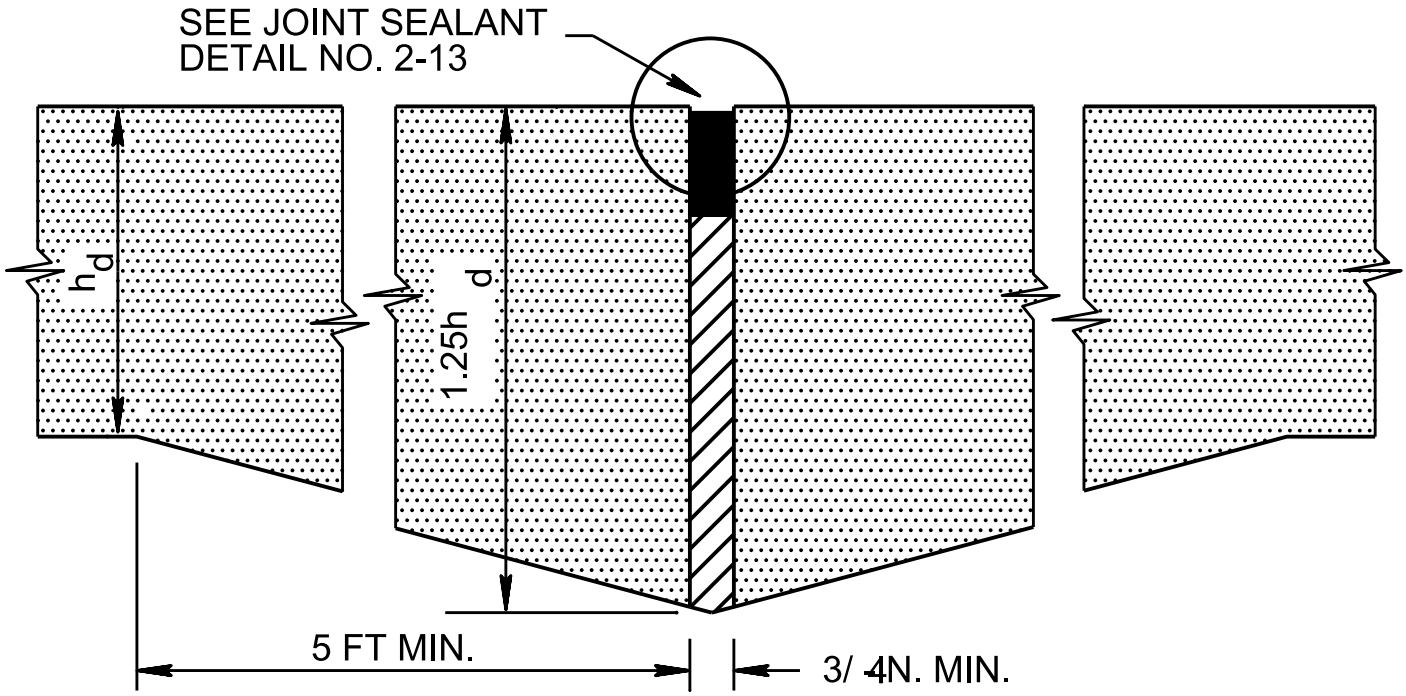

REFERENCE: TM 5-825-3/AFM 88-6, CHAPTER 3,
RIGID PAVEMENTS FOR AIRFIELDS

THICKEN EDGE EXPANSION JOINT FOR PLAIN CONCRETE PAVEMENTS	DATE AUG 1992	FIGURE 2-8b