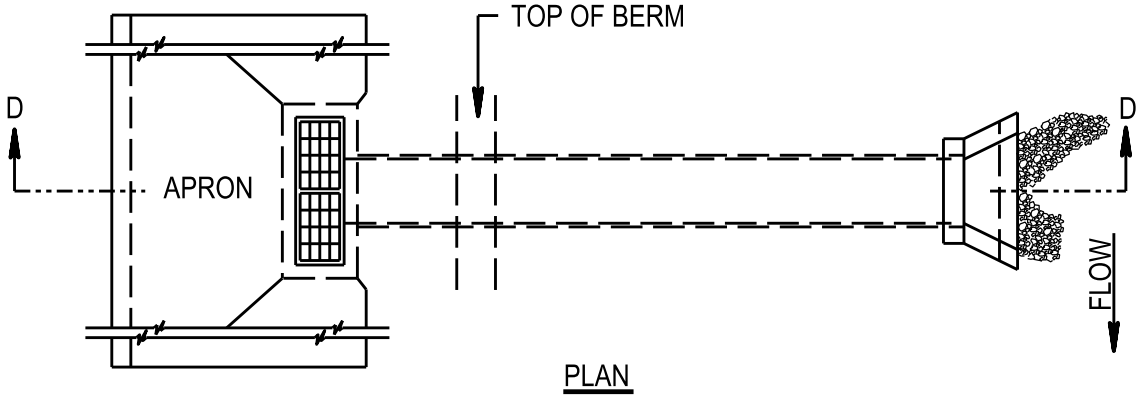

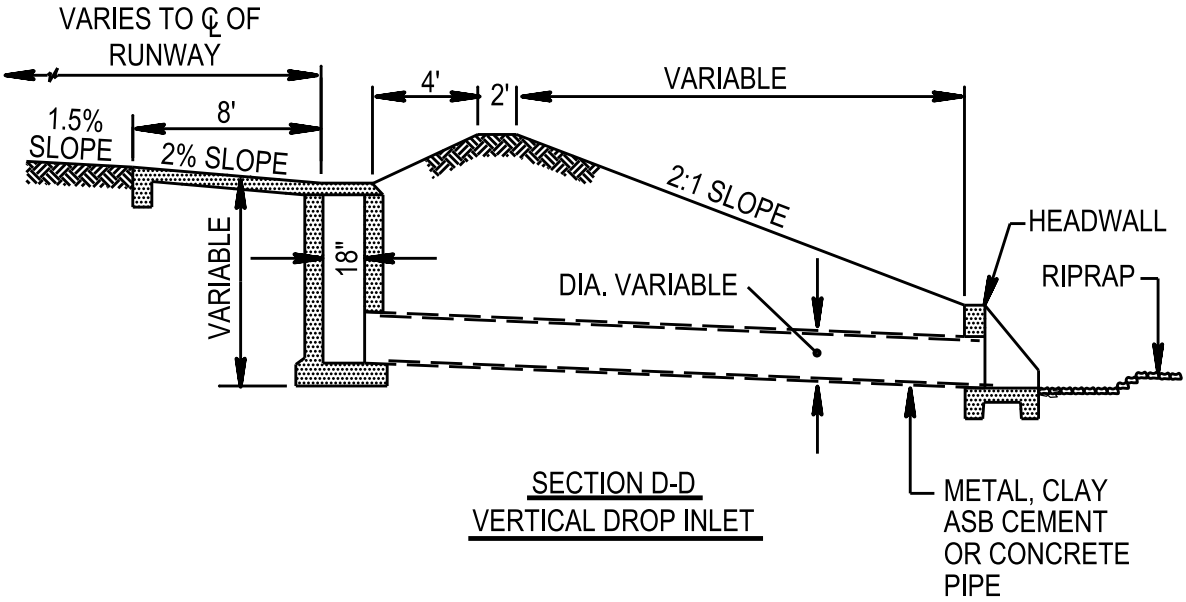

REFERENCE: TM 5-820-3/AFM 88-5, CHAPTER 3, DRAINAGE AND EROSION CONTROL STRUCTURES FOR AIRFIELDS AND HELIPORTS

TYPICAL EMBANKMENT PROTECTION STRUCTURE	DATE AUG 1992	FIGURE 2-35q