NOTES:

1 BONDING MATERIAL TO BE USED BETWEEN EXISTING CONCRETE AND FRESHLY POURED CONCRETE.

2 HANDRAILS SHALL BE PAINTED WITH SILVER COLORED PAINT.

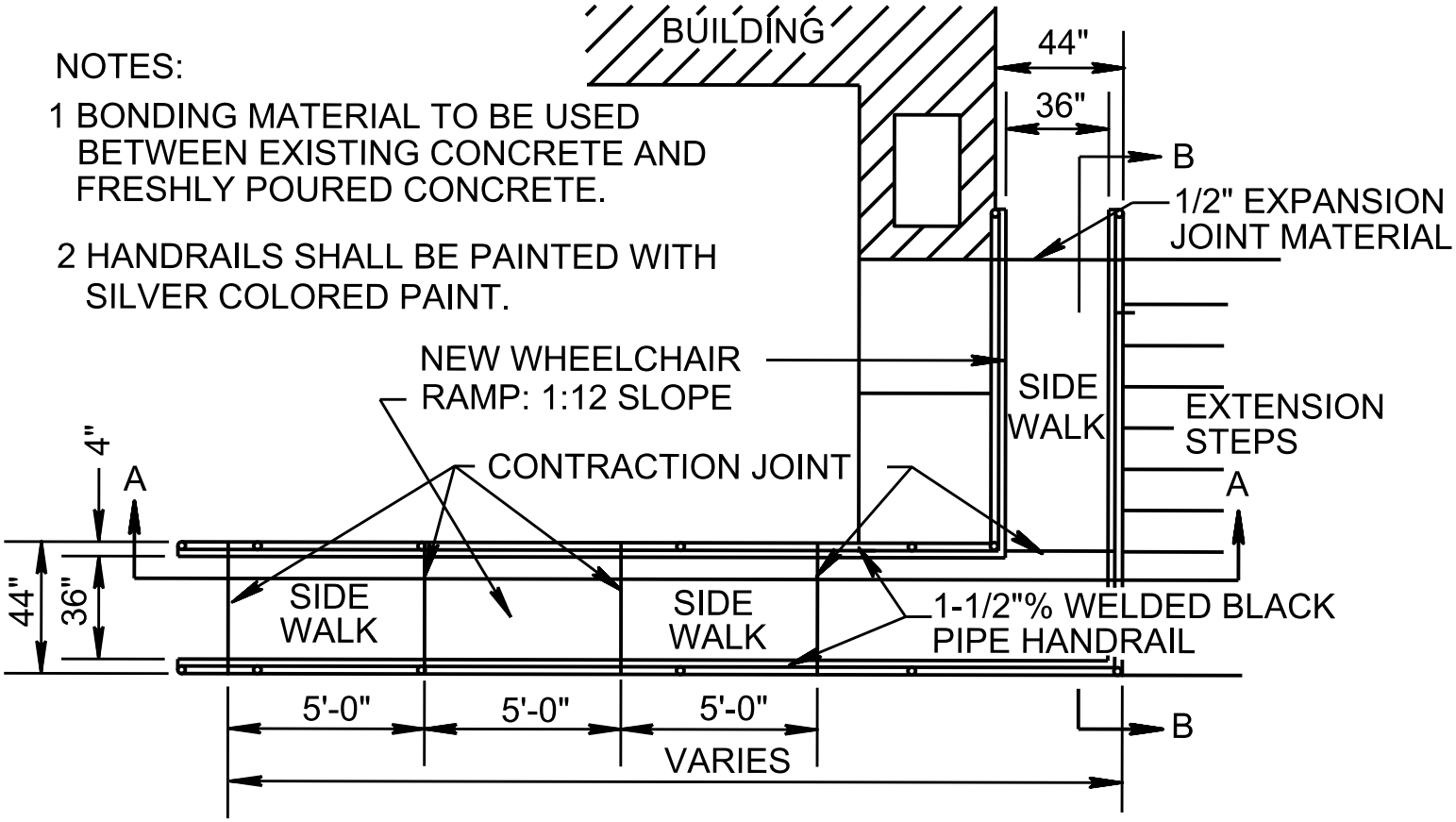

PLAN

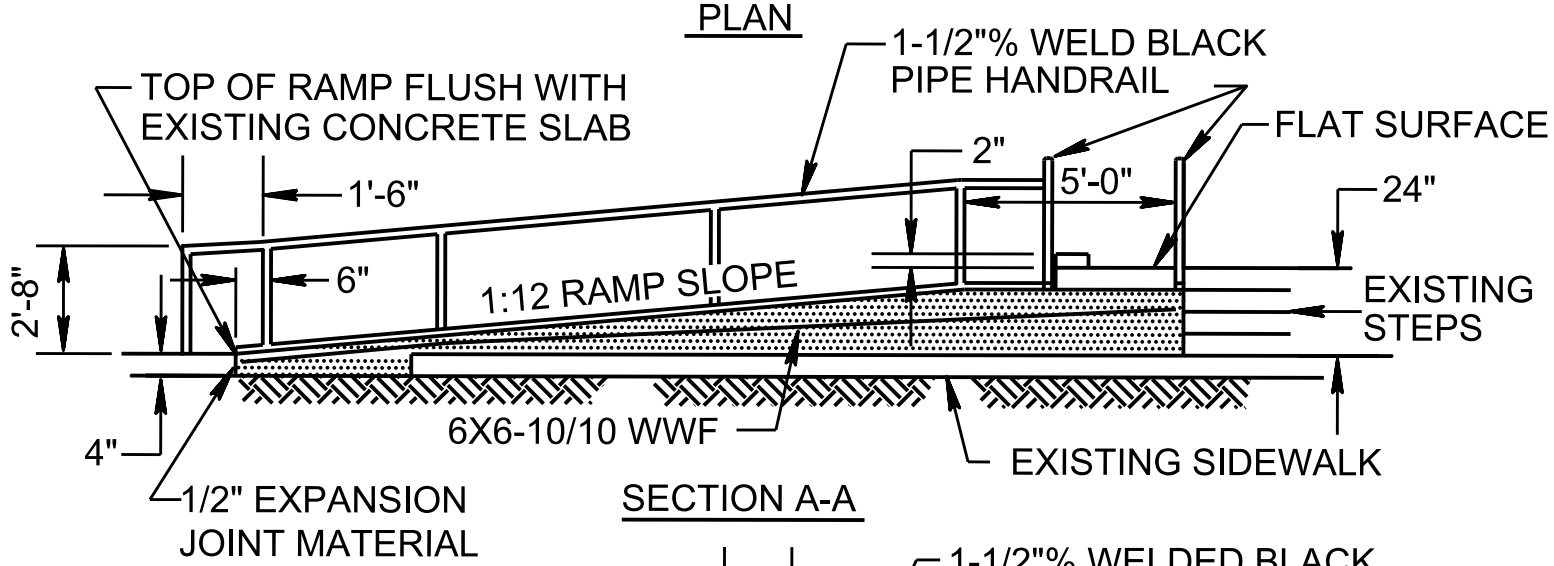

SECTION A-A

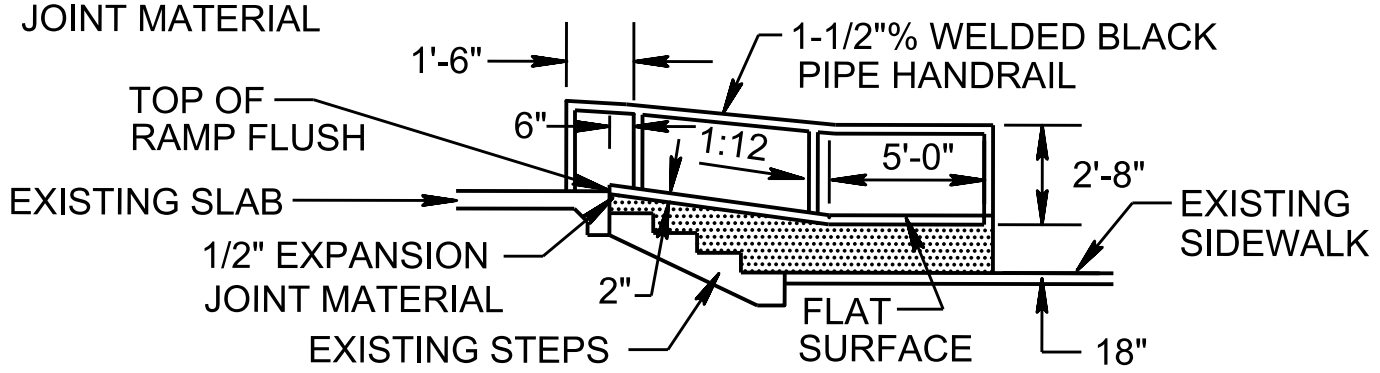

REFERENCE: DOD 4270.1-M CONSTRUCTION CRITERIA

SECTION B-B

TYPICAL SIDEWALK WHEELCHAIR RAMP AND RAIL	DATE AUG 1992	FIGURE 2-32e