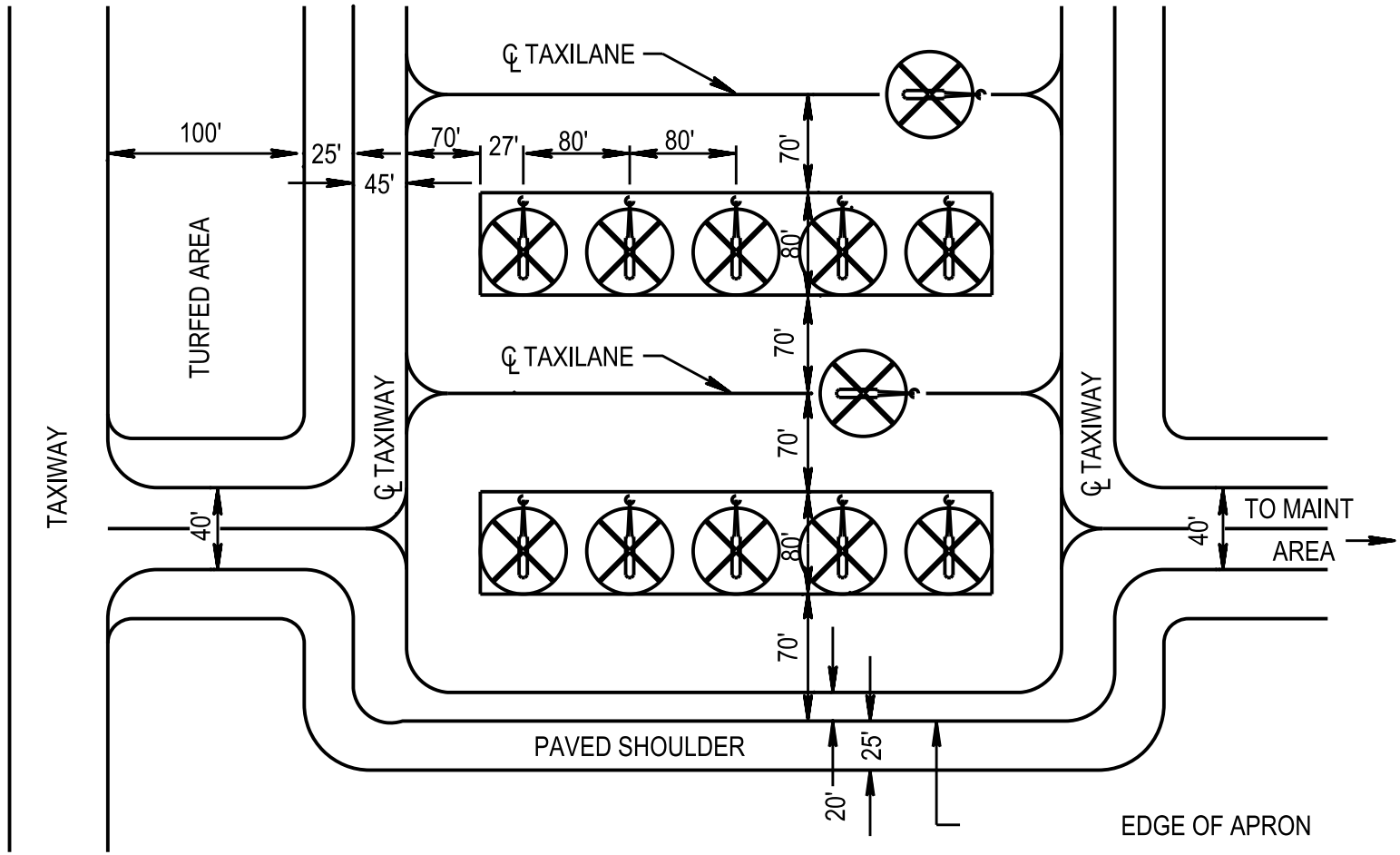

REFERENCE: TM 5-803-4, PLANNING OF ARMY AVIATION FACILITIES

AIRCRAFT PARKING LAYOUT - UH-60 TYPE 1 PARKING APRON	DATE AUG 1992	FIGURE 2-19p