LONGITUDINAL OR TRANSVERSE

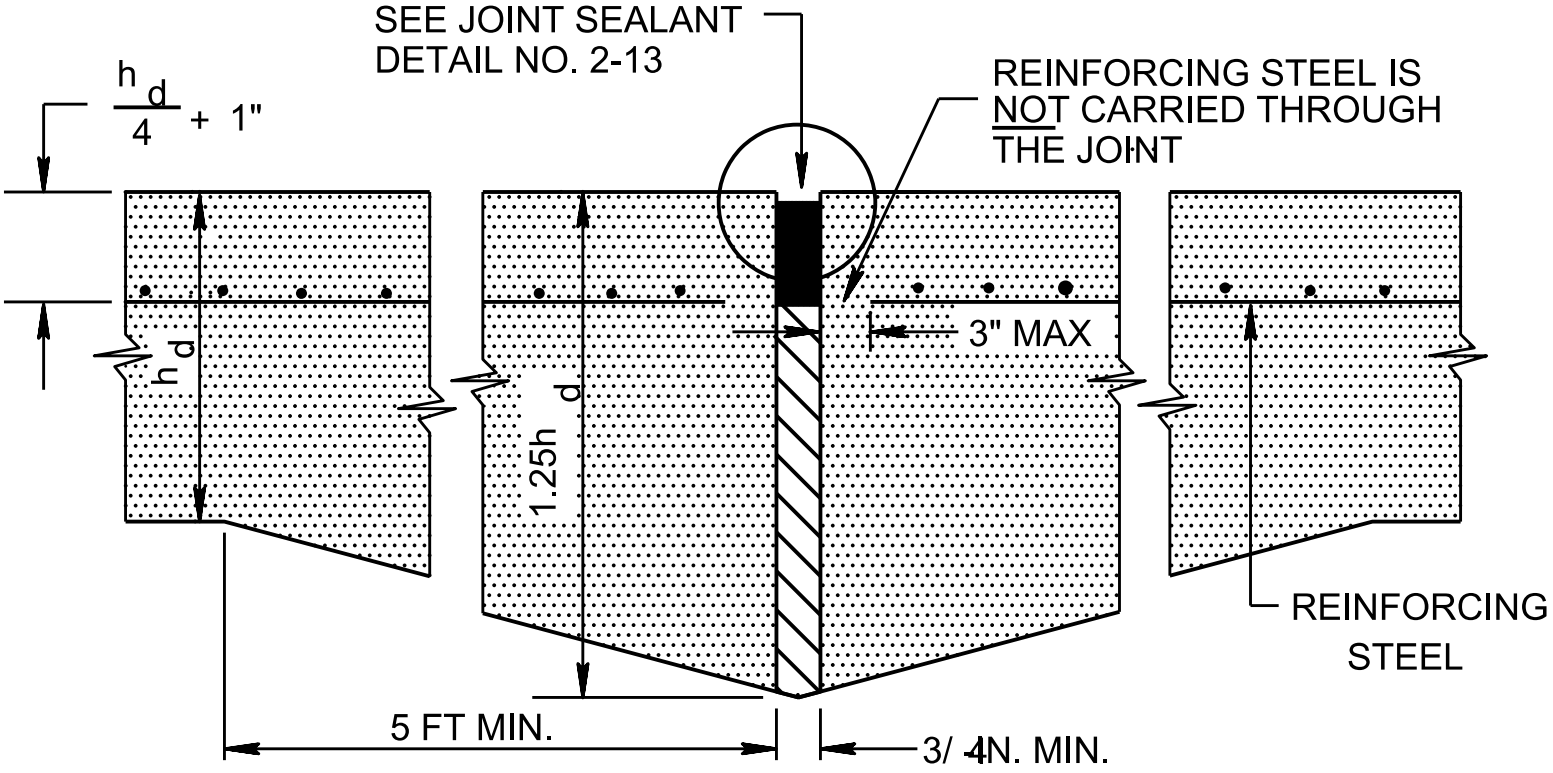

NOTE: THE DEPTH OF THE THICKENED EDGE WILL BE 1.25 TIMES THE EQUIVALENT (NONREINFORCED) PAVEMENT THICKNESS, NOT THE ACTUAL (REINFORCED) THICKNESS.

REFERENCE: TM 5-825-3/AFM 88-6, CHAPTER 3, RIGID PAVEMENTS FOR AIRFIELDS

EXPANSION JT, TE (LONGITUDINAL OR TRANSVERSE) FOR REINFORCED CONCRETE PAVEMENTS	DATE AUG 1992	FIGURE 2-12b